CEPC Radiation Background Studies

Hongbo Zhu (IHEP)

On behalf of the CEPC MDI Study Group

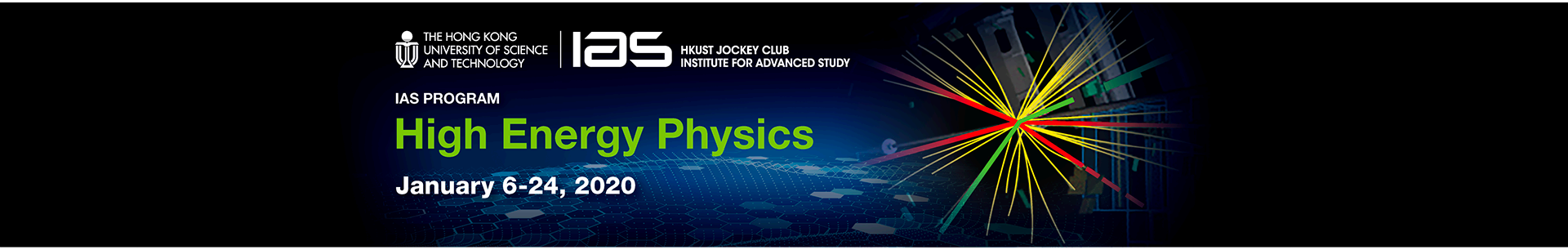

Mini-workshop: Accelerator - Machine Detector Interface for Future Colliders, 16 - 17 January 2020, HK

OUTLINE

- Interaction Region Layout
- Radiation Backgrounds
  - *Synchrotron Radiation*
  - *Pair Production*
  - *Off Energy Beam Particles*
- Summary and Outlook

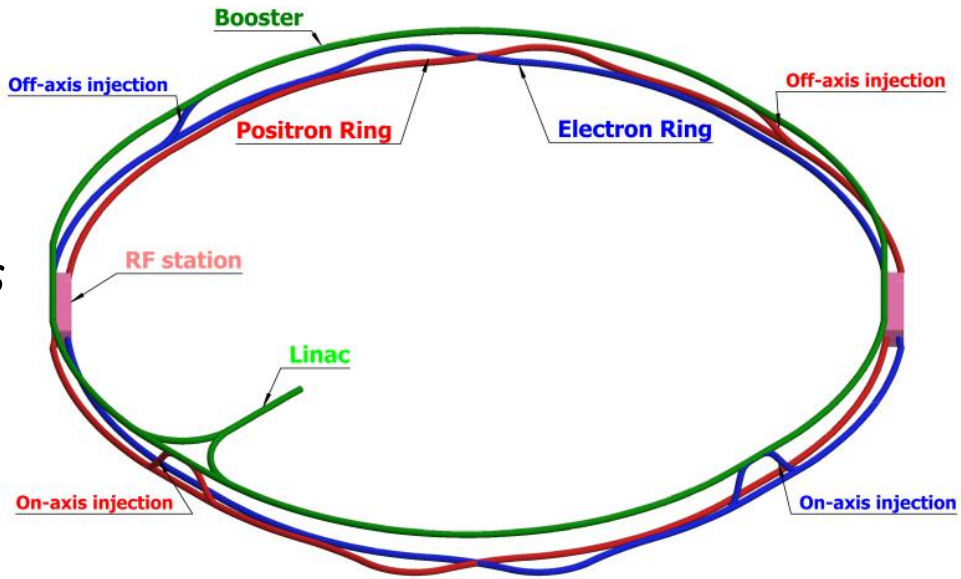

INTERACTION REGION LAYOUT

- Interaction region layout in CDR (*to be optimized*)

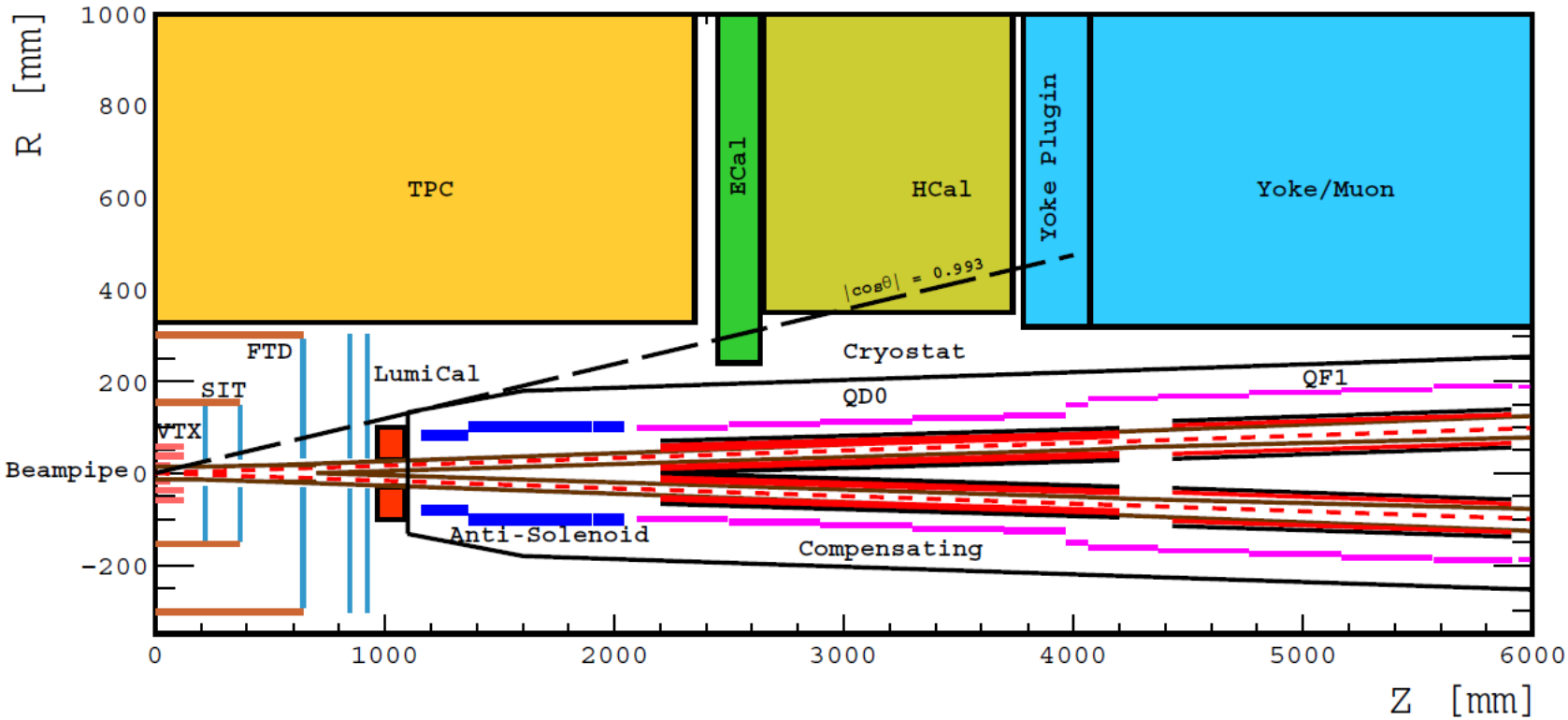

Radiation Background Sources

- Important inputs to the detector (+machine) designs, e.g. detector occupancy, radiation tolerance …

- Must investigate different sources (beam-induced or luminosity related) of radiation backgrounds
  - *Synchrotron radiation*
  - *Beamstrahlung, Pair production*
  - *Off-energy beam particles (radiative Bhabha scattering, beamstrahlung, beam-gas interaction, etc.)*

SYNCHROTRON RADIATION

- Beam particles bent by magnets (**last bending dipole, focusing quadrupoles**) can emit synchrotron radiation photons → critical at circular machines
- **BDSim** to transport beam (core + halo) from the last dipole to the interaction region and record the particles hitting the central beryllium beam pipe

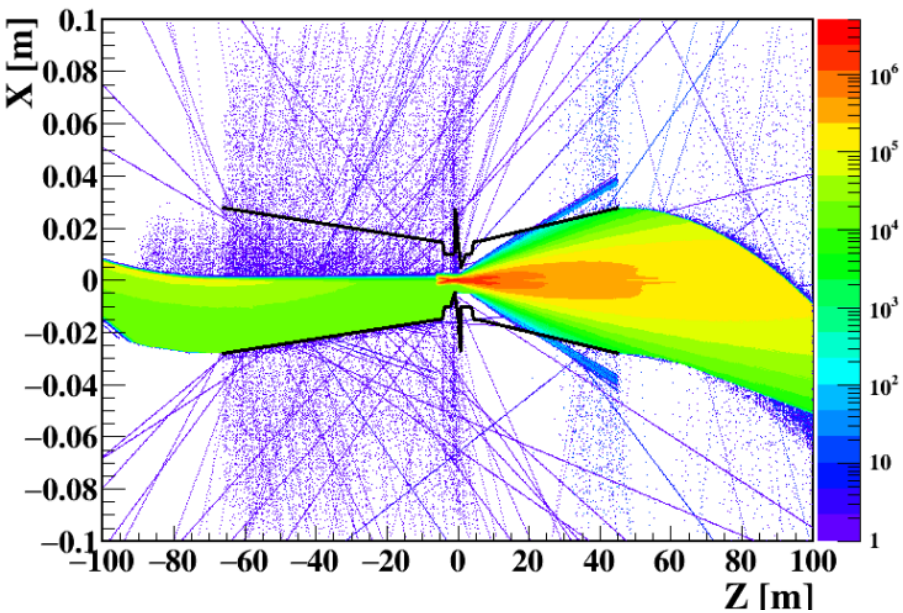

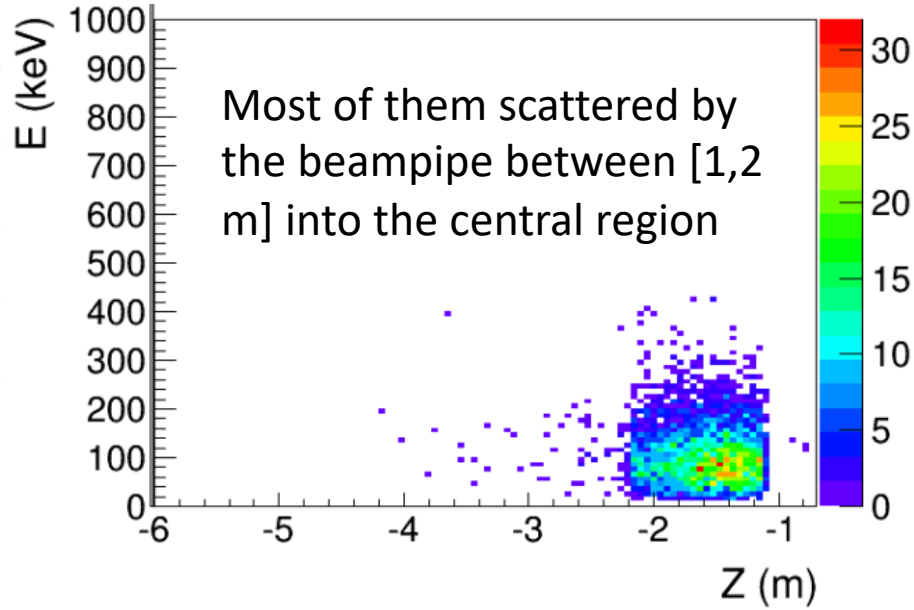

Mask Tip Design

Collimator shape

θ_b= 1.17 mrad

θ_γ= -127 ± 7 μrad at Z=-1.51m

θ_γ= -130 ± 8 μrad at Z=-1.93m

Extension line should be far way from central beampipe

Central Beampipe ($\pm$7 cm from IP)

Beam along Z direction

Extension line should be parallel with SR photons

γ

Collimator at Z=-4.2m: just a box

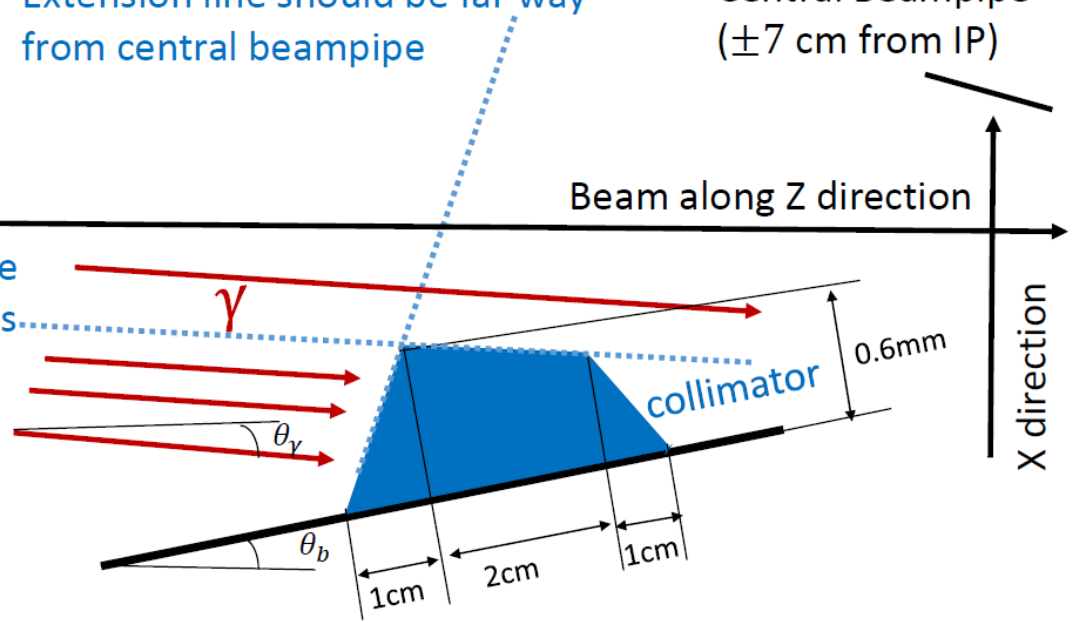

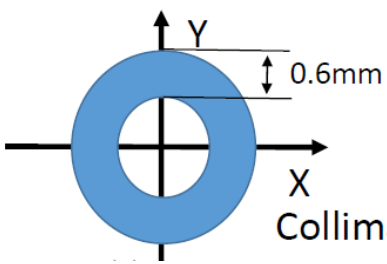

Collimator at X-Y plane: a ring

High-*Z* material required: Au chosen

K-shell photon included in simulation

With Collimators

- **Three masks** located at $|Z|$=1.51, 1.93 and 4.2 m along the beam pipe to the IP to block scattered SR photons → shielding the central beam pipe

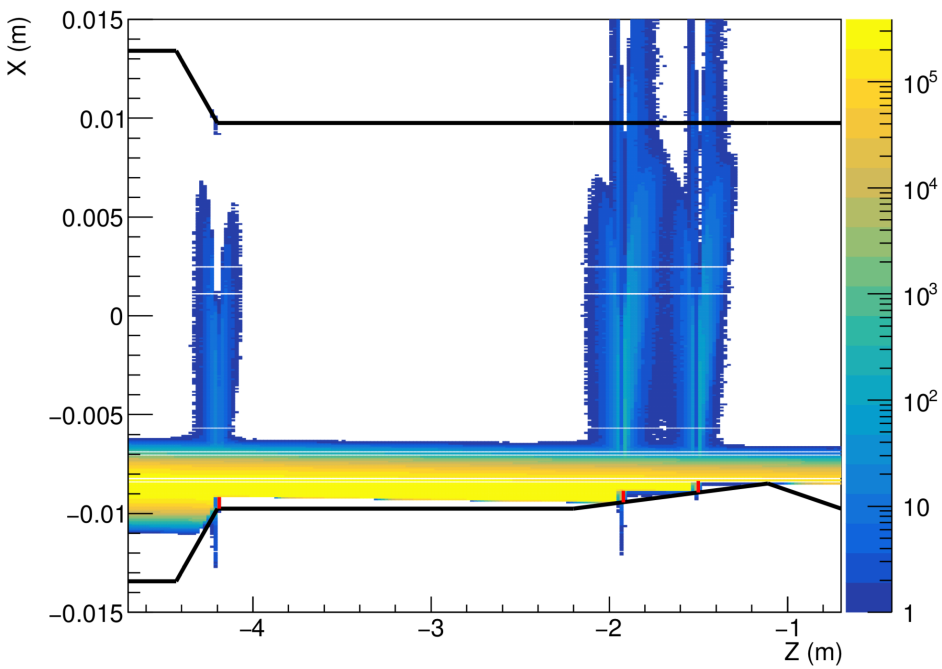

- Number of photons per bunch hitting the central beam pipe dropping from 80, 000 to 250

BEAMSTRAHLUNG & PAIR PRODUCTION

- Estimated as the most important background at Linear Colliders, *not an issue for lower energy/luminosity machines*
- Charged particles attracted by the opposite beam emit photons (beamstrahlung), followed by electron-positron pair production (*dominate contributions from the incoherent pair production*)

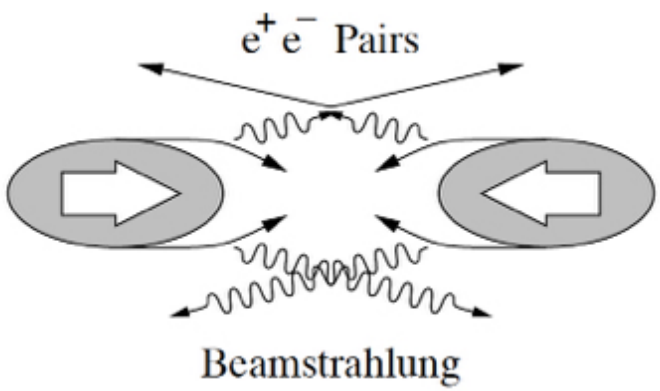

Simulated with GUINEAPIG with external field implemented and cross checked with CAIN

Most electrons/positrons are produced with low energies and in the very forward region, and can be confined within the beam pipe with a strong detector solenoid;

However, a non-negligible amount of electrons/positrons can hit the detector → **radiation backgrounds**

Hadronic backgrounds much less critical

Background Levels

- Using hit density, total ionizing dose (TID) and non-ionizing energy loss (NIEL) to quantify the radiation background levels
- Adopted the calculation method used for the ATLAS background estimation (ATL-GEN-2005-001), safety factor of ×10 applied

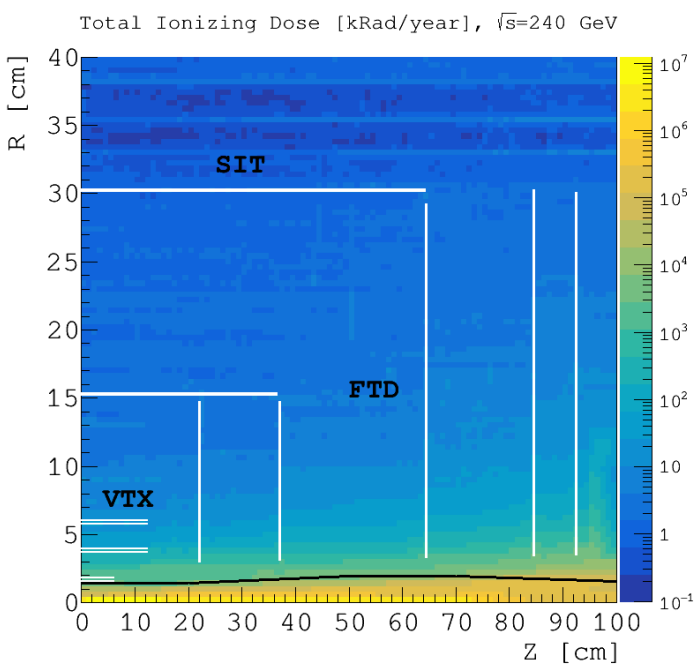

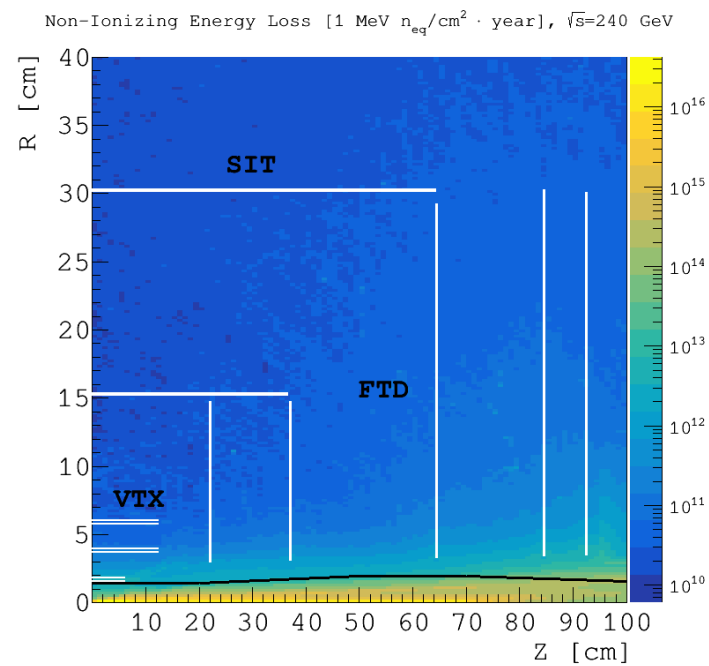

Pair Production (Updated)

- Estimated backgrounds in the vertex detector (still using the CEPC CDR machine parameters)

Higgs ($\sqrt{s} = 240$ GeV)

Layer	Hit Density [$cm^{-2}BX^{-1}$]	TID [kRad/yr]	1 MeV Equ. Neu. Fluence [$n_{eq}cm^{-2}yr^{-1}$]
1	2.26	591.14	1.11×10^{12}
2	1.70	472.12	8.66×10^{11}
3	0.14	42.63	9.08×10^{10}
4	0.11	35.62	8.09×10^{10}
5	0.02	6.15	2.57×10^{10}
6	0.01	5.37	2.41×10^{10}

Z ($\sqrt{s} = 91$ GeV)

	Hit Density [hits/cm^2·BX]	TID [kRad/year]	NIEL [10^{12} 1 MeV n_{eq}/cm^2·year]
B = 2 T			
B = 3 T	0.019	274.09	0.51

Off-Energy Beam Particles

- Beam particles losing energy (radiative Bhabha scattering, beam-gas interaction, beam-gas interaction, etc.) larger than acceptance kicked off their orbit → lost close or even in the interaction region

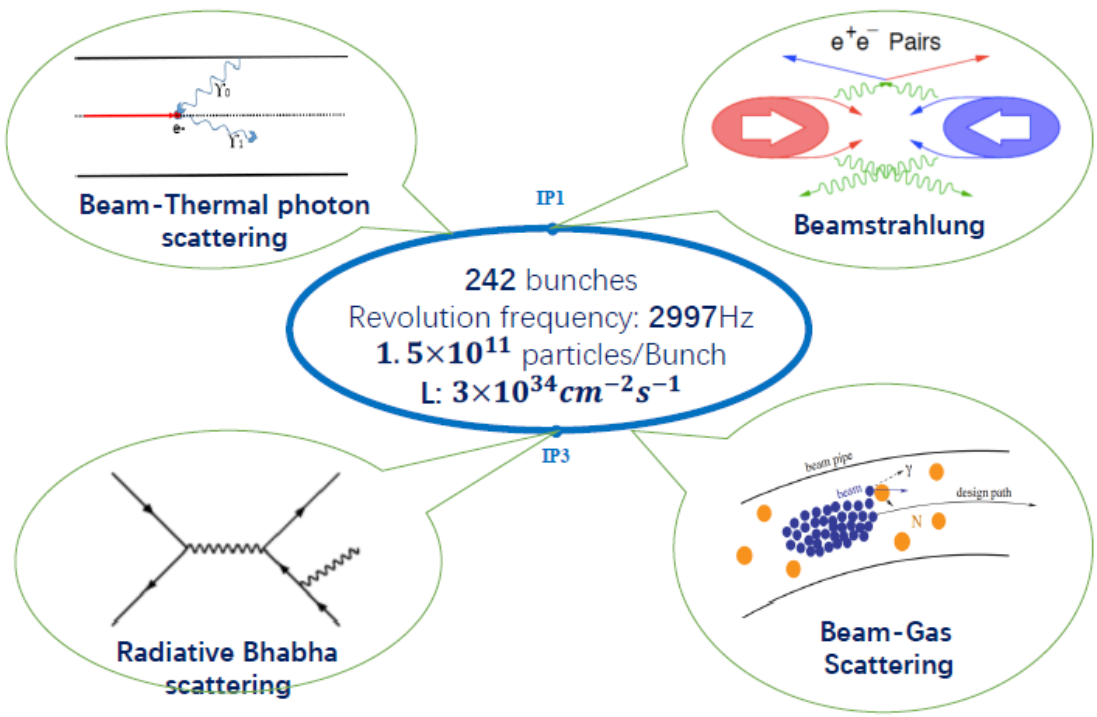

COLLIMATORS

- Two sets of collimators (NOT Sufficient!) placed upstream to stop off-energy beam particles, far away from the beam clearance area (exact aperture size subject to optimization)

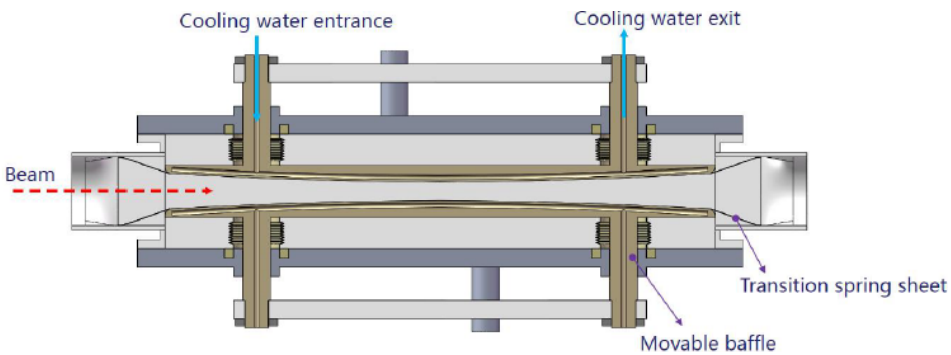

Inspired by the BEPCII collimator design

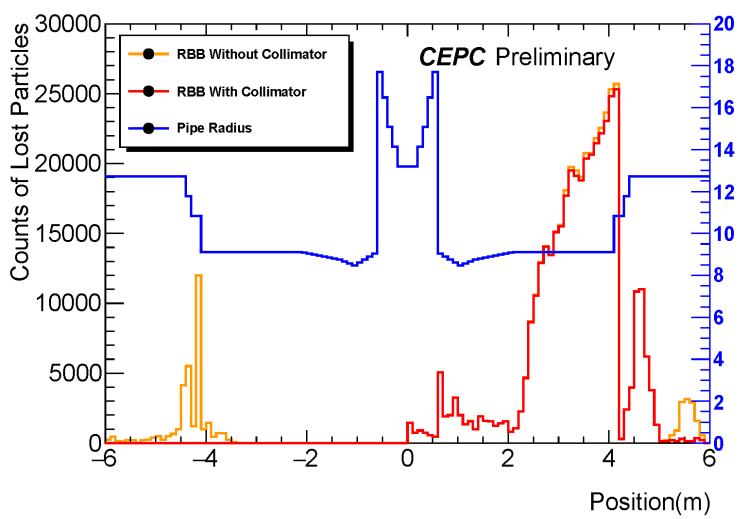

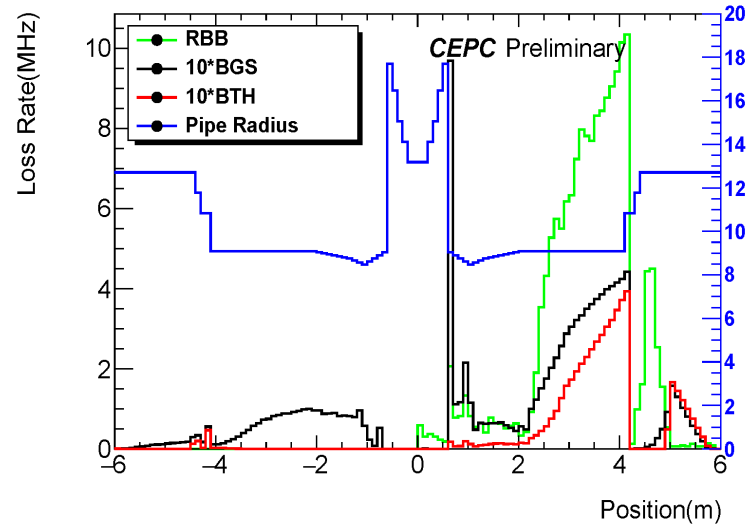

Radiative Bhabha Scattering

- Event generated with BBBrem and particles tracked with SAD
- Hit map in the vertex detector (with collimators)

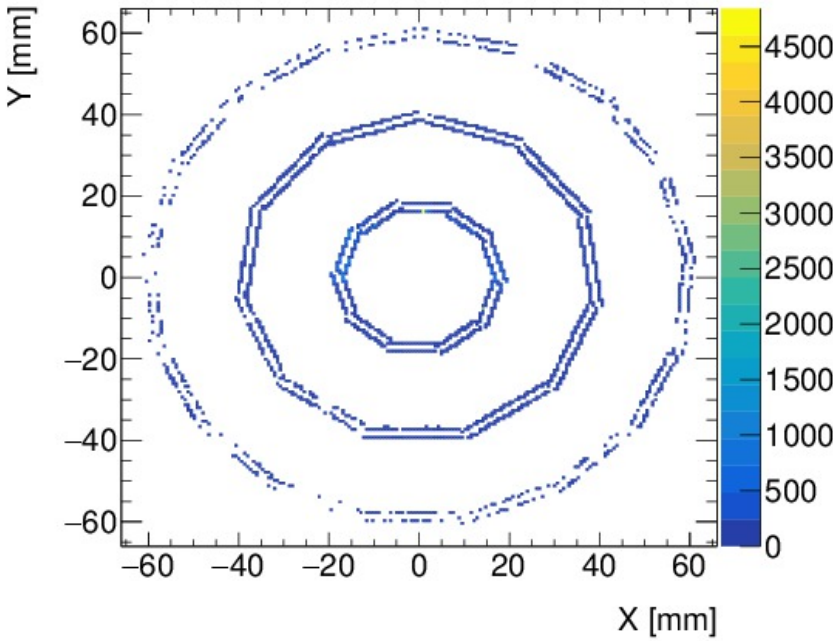

More hits on the –X side

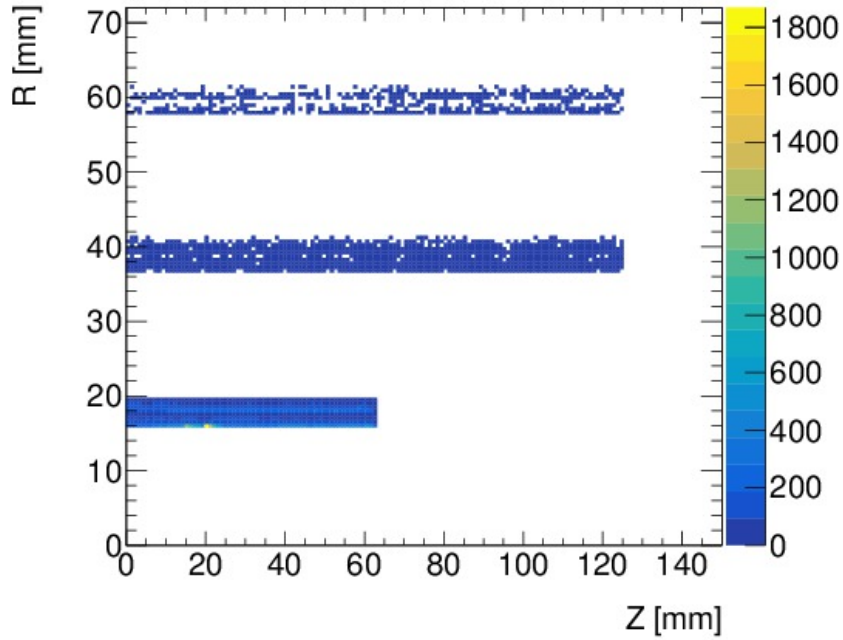

Nearly uniform along the z-axis

Beam-Gas Interaction

- Generated with customized code and tracked with SAD
- Hit map in the vertex detector (with collimators)

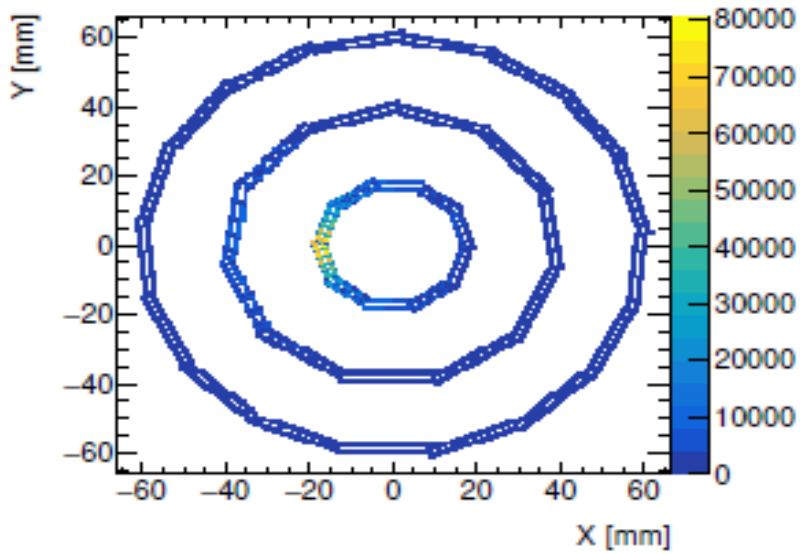

(c) X-Y plane (Beam-Gas Scattering)

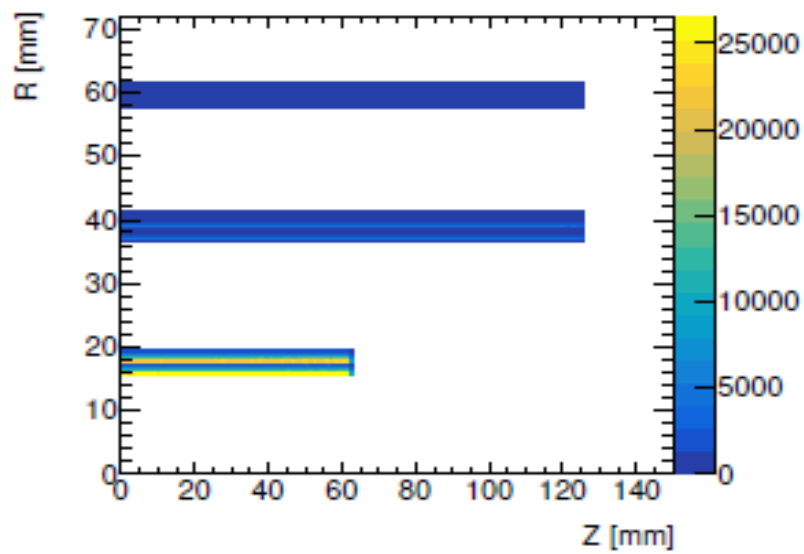

(d) R-Z plane (Beam-Gas Scattering)

Beam Thermal Photons

- Generated with customized code and tracked with SAD
- Hit map in the vertex detector (with collimators)

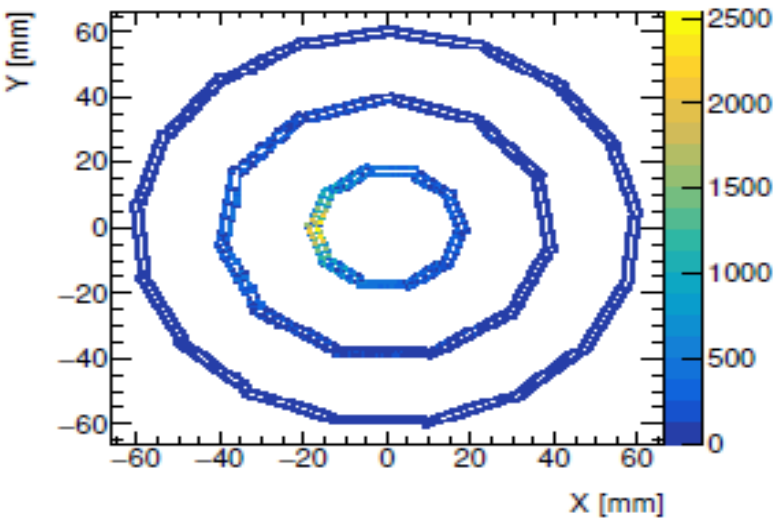

(a) X-Y plane (Beam-thermal photon Scattering)

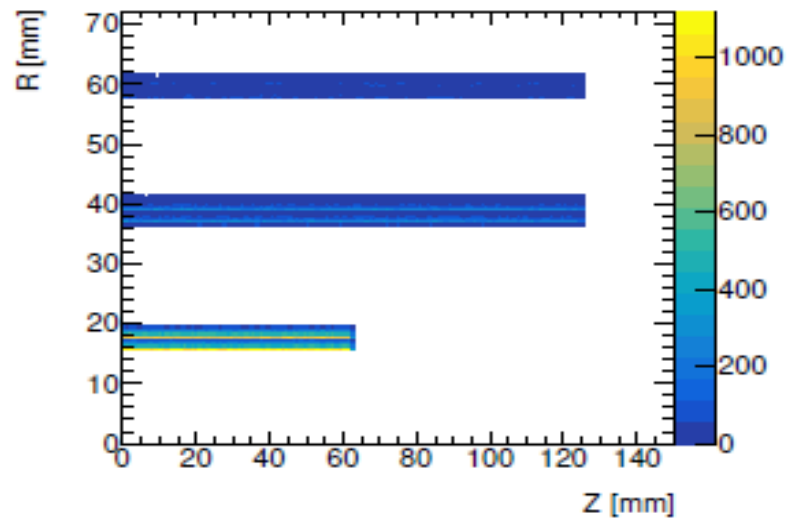

(b) R-Z plane (Beam-thermal photon Scattering)

Off-Energy Beam Particles

- Estimated backgrounds at the first vertex detector layer (still using the CEPC CDR machine parameters)

	Hit Density [hits/cm^2·BX]	TID [MRad/year]	NIEL [10^{12} 1 MeV n_{eq}/cm^2·year]
Radiative Bhabha	0.93	1.2	4.08
Beam Thermal Photons	2.31	2.3	5.48
Beam-Gas Interaction	368.37	39.90	965

Vacuum pressure assumed to be 10^{-7} Pa

Beam-gas interaction backgrounds reduce linearly to the vacuum pressure level → better vacuum, e.g. 10^{-8} Pa

Better Understanding of Beam-Gas Interaction

Verification with BEPC II/BES III

Basic Principles

Single beam mode: three dominant contributions from Touschek, beam-gas and electronics noise (+ cosmic rays)

$$O_{single\ beam} = O_{Touschek} + O_{beam-gas} + O_{e-noise,cosmic}$$

$$= S_t \cdot D(\sigma_{x'}) \frac{I_t \cdot I_b}{\sigma_x \sigma_y \sigma_z} + S_g \cdot I_t \cdot P(I_t) + S_e$$

Double beam mode: additional contributions from luminosity related backgrounds, e.g. radiative Bhabha scattering

$$O_{double\ beam} = O_{e^+} + O_{e^-} + O_{\mathcal{L}}$$

What Can Be Learnt from B II/BES III

Single Beam Mode

$$S_t \cdot D(\sigma_{x'}) \frac{I_t \cdot I_b}{\sigma_x \sigma_y \sigma_z} + S_g \cdot I_t \cdot P(I_t) + S_e$$

- No Beam, detector with high voltage on to measure the backgrounds in MDC and EMC → S_e
- Touschek backgrounds: with fixed beam energy and total current (I_t), varying bunch number (changing I_b), bunch size (σ_y, σ_z) → S_t
- Beam-gas backgrounds: with I_b and bunch size fixed, increasing the bunch number (increasing I_t) → S_g

Example plot from SuperKEKB

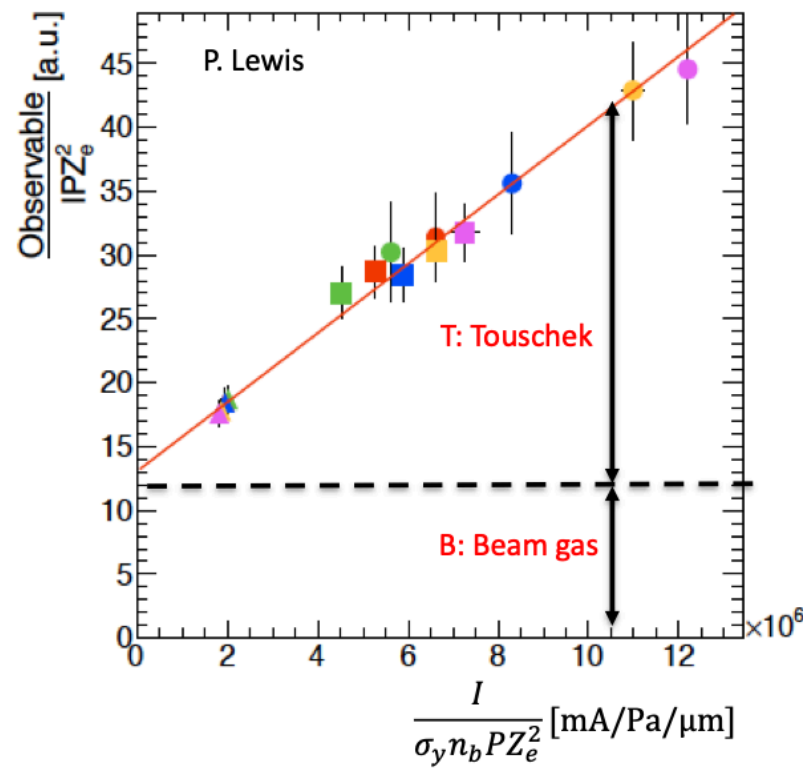

What Can Be Learnt from B II/BES III

Double Beam Mode

$$O_{double\ beam} = O_{e^+} + O_{e^-} + O_{\mathcal{L}}$$

- Fixed beam energy & current, bunch parameters, operating
  - Single e^+/e^-beam
  - Separate e^+ and e^- beams
  - Colliding e^+ and e^- beams
- Thorough understanding of the radiative Bhabha scattering backgrounds would be vital for optimizing the collimators.

The number of collimators is shown at around 2-4. Taking into account the necessary freedom required for tuning, the number of the collimators is extremely insufficient. According to experience in other colliders such as LEP, KEKB, PEP-II, SuperKEKB, 10-20 of them may be needed per IP.

Proposed Experimental Steps

SuperKEKB background runs

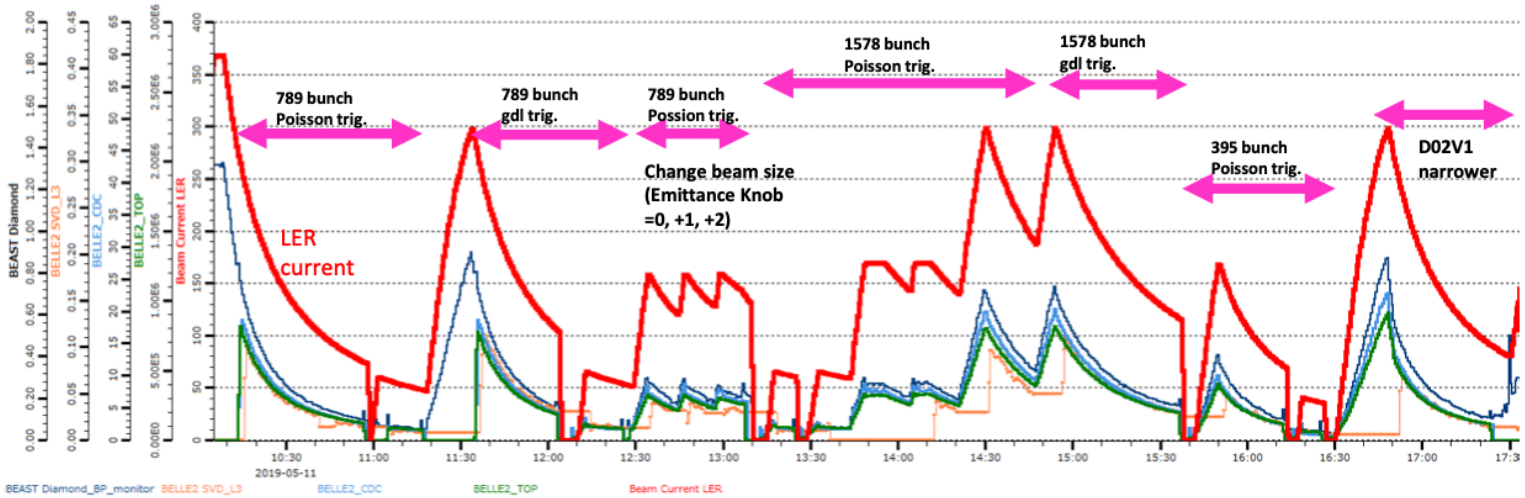

- Propose to repeat the summer studies with longer machine time (extending to 12 hours) to take background with more machine/beam parameter points (details attached)
- Important to improve the communication between the machine and detector operation

Vacuum Pressure Degradation

Proposed by H. Shi & M. Sullivan

- Beam-gas backgrounds depending significantly on the vacuum pressure, which can be affected by synchrotron radiation during operation;

- LEP studies back in 1982 with very low photon energy (critical energy~2 keV);
- Relevant parameters for CEPC:
  - Higgs:~360 keV on arc, ~25 keV on last bending;
  - Z:~23keV on arc.
- To find an end station at the SR facility with the beam energy of ~25 keV, e.g. BSRF

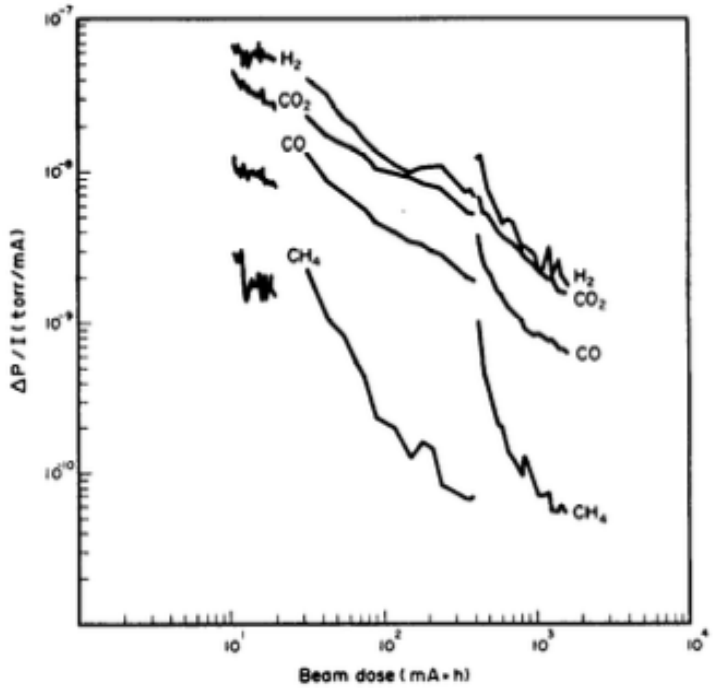

Figure 4. The specific partial pressure rise $\Delta P/I$ as a function of the beam dose for H_2, CH_4, CO and CO_2 for the first series of measurements—unbaked.

EXPERIMENTAL SETUP

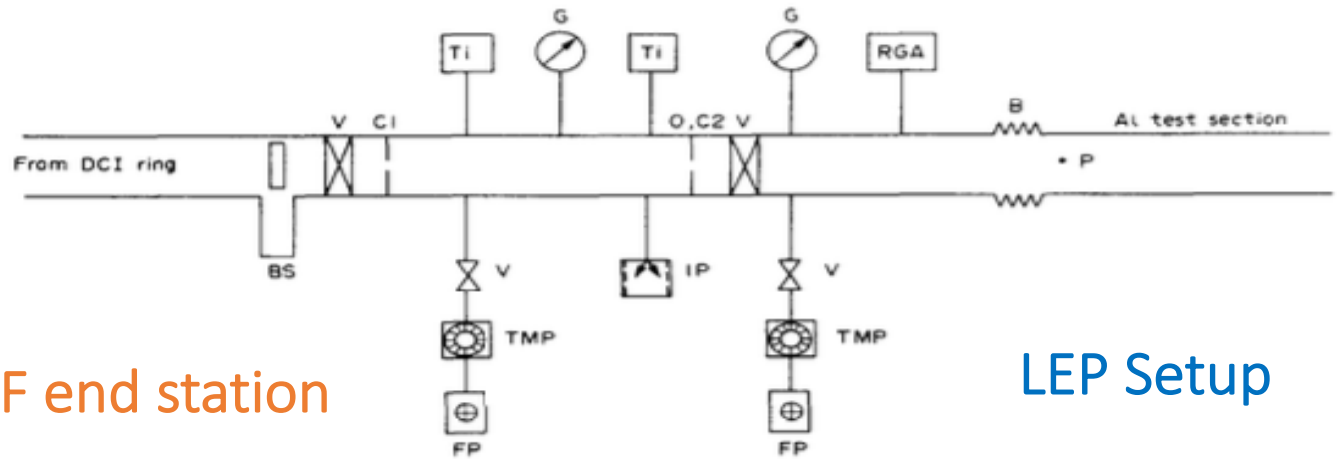

BSRF end station

LEP Setup

- CEPC vacuum chamber prototypes (Cu/Al, 2 meters long preferred but depending on the space)
- Gas pressure monitors and gas composition analysis tools
  - Pump the Cu/Al chamber and set incident angle and energy;
  - Record pressure, gas type, pump speed with photon exposure;
  - Stop when reach the stopping condition (accumulated current or pressure); expose the chamber to air;
  - Repeat with different conditions (energy, angle, hitting side…).

SUMMARY & OUTLOOK

- Radiation backgrounds calculated for different sources
  - Pair production, synchrotron radiation, off-energy beam particles (with collimators)

- Validate (partly) the simulation codes with background data from BEPC II, LEP II and SuperKEKB
  - Participate in the background studies for SuperKEKB/Belle II Phase III commissioning, postponed to May …

- To include machine related backgrounds and provide updates as the machine design evolves …