Future Lepton Colliders

Akira Yamamoto (KEK)

for discussions in
a forum session, 26 Jan., 2017

Future Lepton Colliders

Linear Colliders (energy extendable):

ILC (2 x 500 GeV) :

- SRF, longer pulse, higher E. effciency
- Klystron driven
- 1/10 scaled machine (EXFEL) realized

CLLIC (2 x 1,500 GeV) :

- NRF, HG →Compact
- Two beam driven

Circular Colliders (max. energy fixed):

Based on Well-known technology

CEPC (2 x 120 GeV):

- SRF, higher L-eff., at ≤ 2x120 GeV,

FCC-ee (2 x 175 GeV):

- SRF, higher L-eff. at ≤ 2 x 175 GeV,
- AC power limit/guideline to be mitigated

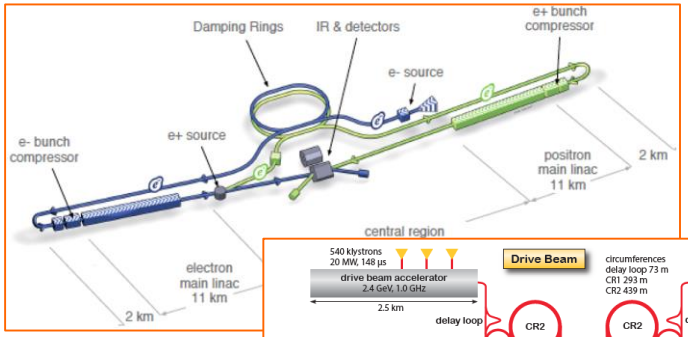

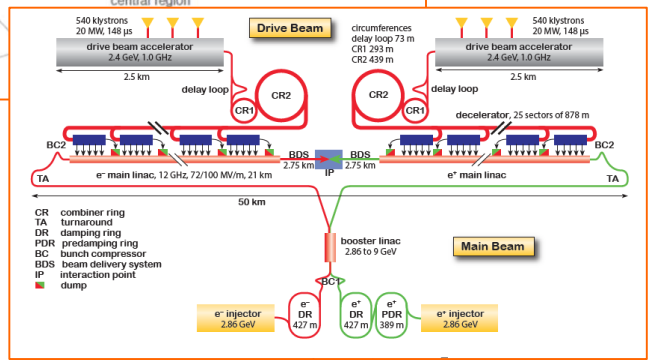

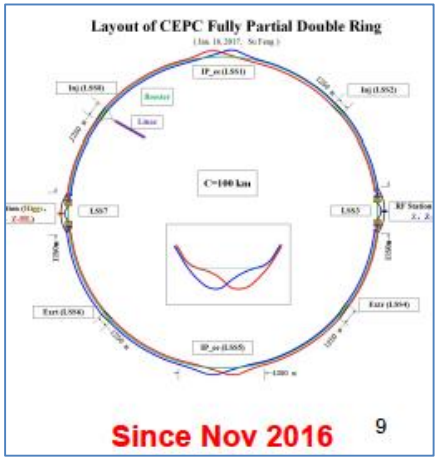

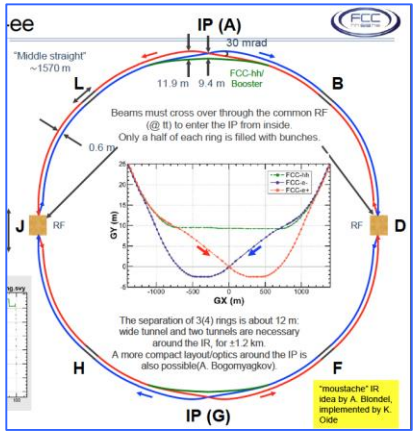

Some Comparisons of Future Lepton Colliders

	Unit	ILC - TDR			CLIC – CDR+			CEPC	FCC-ee tt-bar
Technology		Linear SRF, Klystron driven			Linear NRF, 2-beam driven			Circular SRF	Circular SRF
Energy	GeV	250	**500**	1,000	380	500 – B/A	3,000	240	**350**
Acc. Length	km	~21	31	50	11	13	48	100	100
Lumin. / IP	10^{34} cm^{-2}s^{-1}	**0.82***	**1.8**	**3.6**	**1.5***	**2.3**	**5.9**	**3.3 / 5.4 ******	**1.9 ******
Acc. Gradient	MV/m	31.5	31.5	31.5/45	72	100/80	100	14	
Res. Frequency	GHz	1.3	1.3	1.3	12	12	12	0.65	0.65
IR, v. beam-size	nm	7.7	5.9	2.7	2.9	2.3	1	--	--
Beam Power	MW (2-beams)	2 x 2.9	2 x 5.2	2 x 13.6		2 x 4.7	2 x 14	--	--
SR loss	MW							30 / 50	100 (tbc)
AC Power	MW	**129**	**163**	**300**	**252**	**271**	**589**	**210 / 350 (tbc)**	**364**
L / AC	Relative	0.64	1.1	1.2	0.60	0.85	1.0	1.6 / 1.5	0.52**

A, Yamamoto, 17/01/26

* enable to be further optimized for staging

** effectively x N_{IR}

ICFA Statement in 2014

as a current consensus

ICFA Statement on its Support of the ILC, its Endorsement of the Strategic Plans of Europe, Asia and the United States, and its Encouragement of International Studies of Future Circular Colliders

ICFA endorses the particle physics strategic plans produced in Europe, Asia and the United States and the globally aligned priorities contained therein. Here, ICFA reaffirms its support of the ILC, which is in a mature state of technical development and offers unprecedented opportunities for precision studies of the newly discovered Higgs boson. In addition, ICFA continues to encourage international studies of circular colliders, with an ultimate goal of proton-proton collisions at energies much higher than those of the LHC.

6 July 2014

ILC and CLIC Design Parameters

A. Yamamoto and K. Yokoya, Rev. of Acc. Science and Technology, (RAST) Vo. 7 (2014) 115 – 136.

Table 4. Accelerator parameters for the ILC and the CLIC in various modes [27, 28].

Parameters	ILC baseline	ILC Hi-lumi	ILC* E-upgrade	CLIC staging	CLIC baseline
Accelerating technology	SRF	SRF	SRF	NRF	NRF
Center-of-mass energy (GeV)	500	500	1,000	500	3,000
Luminosity ($cm^{-2}s^{-1}$)	1.8×10^{34}	3.6×10^{34}	4.9×10^{34}	2.3×10^{34}	5.9×10^{34}
Luminosity at top 1% CM energy	1.1×10^{34}	2.2×10^{34}	2.2×10^{34}	1.4×10^{34}	2.0×10^{34}
Accelerator length (km)	31	31	50	13.0	48.4
Acc. gradient loaded (MV/m)	31.5	31.5	31.5/45	80	100
RF (GHz)	1.3	1.3	1.3	12	12
Beam power/beam (MW)	5.2	11.0	13.6	4.7	14
No. of particles/bunch ($10^9 e^{+/-}$)	20	20	17.4	6.8	3.72
No. of bunches/pulse	1,312	2,625	2,450	354	312
Bunch separation (ns)	554	366	366	0.5	0.5
Beam pulse duration (μs)	727	900	900	177	0.156
Beam pulse current [mA]	5.8	8.8	7.6	2180	1190
Repetition rate [Hz]	5	5	4	50	50
H./V. norm. emittance ($10^{-6}/10^{-9}$)	10/35	10/35	10/30	2.4/25	0.66/20
H./V. IP beam size (nm)	474/5.9	474/5.9	335/2.7	203/2.3	40/1
Beamstrahlung photon/electron	1.72	1.72	1.97	1.3	2.1
Wall plug to beam transfer eff. (%)†	6.4	10.2	9.1	3.5	4.8
Power efficiency in the main linac‡	12	N/A	N/A	N/A	6
Total power consumption (MW)	163	204	300	271	582

*Here the parameter set B for 1 TeV in TDR is adopted.
†Final beam power (two beams) divided by the total site power.
‡Beam power gain in main linac divided by AC power into main linac, including cryogenics, drive linac, linac magnets, drive beam manipulation, etc.

Parameters for CEPC Fully Partial Double Ring
（wangdou20161202-100km_2mmβy）

	Pre-CDR	*H-high lumi.*	*H-low power*
Energy (GeV)	120	120	120
Circumference (km)	54	100	100
SR loss/turn (GeV)	3.1	1.67	1.67
N_e/bunch (10^{11})	3.79	0.97	0.97
Bunch number	50	644	425
SR power /beam (MW)	51.7	**50**	**33**
β_{IP} x/y (m)	0.8/0.0012	0.144 /0.002	0.144 /0.002
Emittance x/y (nm)	6.12/0.018	1.56/0.0047	1.56/0.0047
ξ_x/ξ_y/IP	0.118/0.083	0.0126/0.083	0.0126/0.083
RF Phase (degree)	153.0	131.2	131.2
V_{RF} (GV)	6.87	**2.22**	**2.22**
f_{RF} (MHz) (harmonic)	650	650 (217800)	650 (217800)
Nature σ_z (mm)	2.14	**2.72**	**2.72**
Total σ_z (mm)	2.65	2.9	2.9
HOM power/cavity (kw)	3.6 (5cell)	0.64 (2cell)	0.42 (2cell)
Energy acceptance (%)	2	1.5	1.5
Energy acceptance by RF (%)	6	2.2	2.2
Life time due to beamstrahlung_cal (minute)	47	52	52
L_{max}/IP (10^{34}cm^{-2}s^{-1})	2.04	3.1	2.05

Parameters for CEPC Fully Partial Double Ring
（wangdou20161219-100km_1mmβy）

	Pre-CDR	H-high lumi.	H-low power	W	Z	
Energy (GeV)	120	120	120	80	45.5	45.5
Circumference (km)	54	100	100	100	100	100
SR loss/turn (GeV)	3.1	1.67	1.67	0.33	0.034	0.034
N_e/bunch (10^{11})	3.79	1.12	1.12	1.05	0.46	0.46
Bunch number	50	555	333	1000	16666	65716
SR power /beam (MW)	51.7	50	30	16.7	12.7	50
β_{IP} x/y (m)	0.8/0.0012	0.3/0.001	0.3/0.001	0.1 /0.001	0.12/0.001	0.12/0.001
Emittance x/y (nm)	6.12/0.018	1.01/0.0031	1.01/0.0031	2.68/0.008	0.93/0.0049	0.93/0.0049
ξ_x/ξ_y/IP	0.118/0.083	0.029	0.029	0.0082/0.055	0.0075/0.054	0.0075/0.054
RF Phase (degree)	153.0	0.083	0.083	149	160.8	160.8
V_{RF} (GV)	6.87	2.0	2.0	0.63	0.11	0.11
f_{RF} (MHz) (harmonic)	650	650	650	650 (217800)	650 (217800)	
Nature σ_z (mm)	2.14	**2.72**	**2.72**	**3.8**	**3.93**	**3.93**
Total σ_z (mm)	2.65	2.9	2.9	3.9	4.0	4.0
HOM power/cavity (kw)	3.6 (5cell)	0.75(2cell)	0.45(2cell)	1.0 (2cell)	1.6(1cell)	6.25(1cell)
Energy acceptance (%)	2	1.5	1.5			
Energy acceptance by RF (%)	6	1.8	1.8	1.5	1.1	1.1
Life time due to beamstrahlung_cal (minute)	47	52	52			
L_{max}/IP ($10^{34}cm^{-2}s^{-1}$)	2.04	5.42	3.25	4.08	18.0	70.97

lepton collider parameters

parameter	FCC-ee					(LEP2)
physics working point	**Z**		**WW**	**ZH**	**tt_{bar}**	
energy/beam [GeV]	**45.6**		**80**	**120**	**175**	105
bunches/beam	30180	**91500**	**5260**	**780**	**81**	4
bunch spacing [ns]	7.5	**2.5**	**50**	**400**	**4000**	22000
bunch population [10^{11}]	1.0	**0.33**	**0.6**	**0.8**	**1.7**	4.2
beam current [mA]	1450	**1450**	**152**	**30**	**6.6**	3
luminosity/IP x 10^{34}cm^{-2}s^{-1}	210	**90**	**19**	**5.1**	**1.3**	0.0012
energy loss/turn [GeV]	0.03	**0.03**	**0.33**	**1.67**	**7.55**	3.34
synchrotron power [MW]	**100**					22
RF voltage [GV]	0.4	**0.2**	**0.8**	**3.0**	**10**	3.5
rms cm *E* spread SR [%]	0.03	**0.03**	**0.05**	**0.07**	**0.10**	0.11
rms cm *E* spread SR+BS [%]	0.15	**0.06**	**0.07**	**0.08**	**0.12**	0.11